Complete CNG conversion products range presentation

Emer SPA – Unipersonale – Via Bormioli 19 – Cap 25135 – Z. IND. S. Eufemia – Brescia- Italia –
Tel +39 030 2510391 – fax +39 030 2510392 Email:commercial@emer.it

Emer Turnkey Solution

Emer is in the position to cover all the customers requirements in terms of products , know how, emission test and homologation assistance.

Written by : Eng. Alessandro Schiavon
Approved by : Eng. Michele Crivellari
Date : 05/08/2009
Customer Ref : 34300-74/421

Product Offer

Is possible to subdivide the product range as follow:

-High pressure components
-Low Pressure components
- Electronic Control Unit (ECU)

High Pressure Components

A) Filling Valve
B) Cylinder Valve
C) Monometer
D) Preshaped Steel pipe
E) Connections
F) Fixing Accessories for HP steel pipe

Written by : Eng. Alessandro Schiavon
Approved by : Eng. Michele Crivellari
Date : 05/08/2009
Customer Ref : 34300-74/421

High Pressure Components

A) Filling Valve

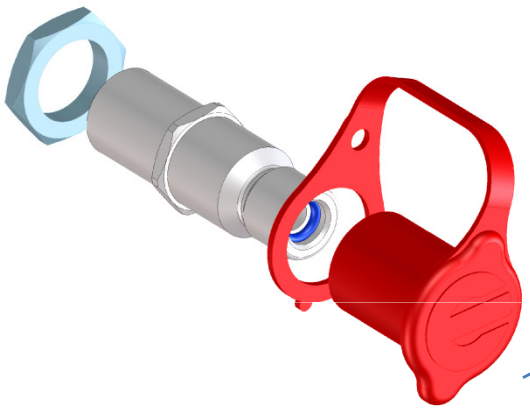

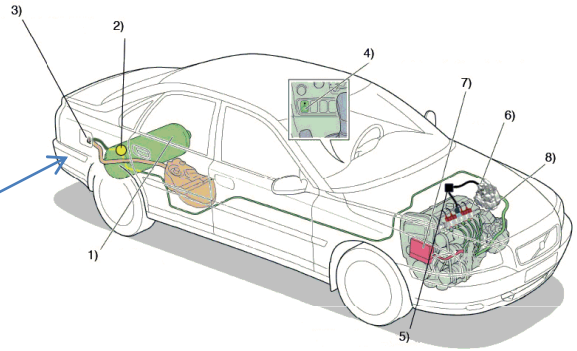

High Pressure Components

A) Cylinder Valve

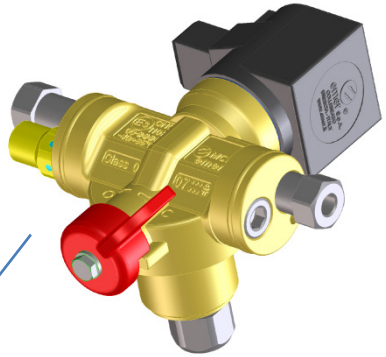

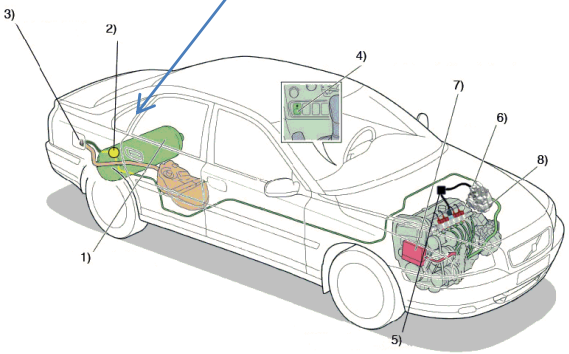

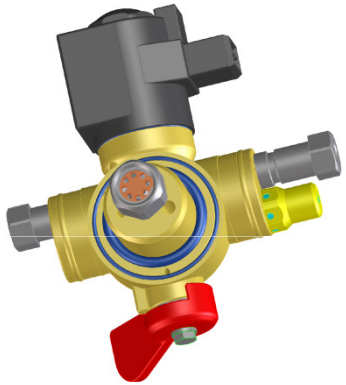

emer S.p.A.

Written by : Eng. Alessandro Schiavon
Approved by : Eng. Michele Crivellari
Date : 05/08/2009
Customer Ref : 34300-74/421

High Pressure Components

A) Preshaped Steel pipe Emer code

- Easy installation
- Saftey Procedure
- Time saving solution

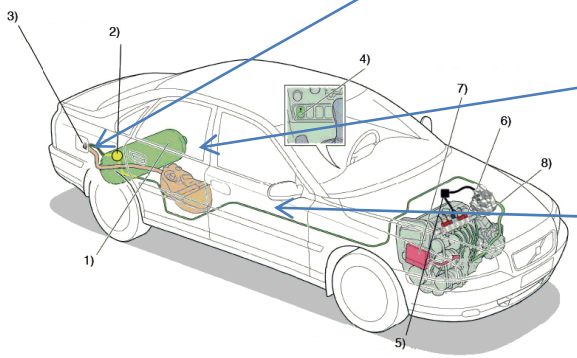

From Filling valve to Tank Valve

From Tank valve to Tank Valve

From Tank Valve to PCD

Dimensional shape quotation TBD with customer

emer S.p.A.

Written by : Eng. Alessandro Schiavon
Approved by : Eng. Michele Crivellari
Date : 05/08/2009
Customer Ref : 34300-74/421

Low Pressure Components

F) CNG/LPG Pressure Regulator
G) Injection Rail
H) Low Pressure Filter
I) Fixing accessories

Written by : Eng. Alessandro Schiavon
Approved by : Eng. Michele Crivellari
Date : 05/08/2009
Customer Ref : 34300-74/421

Low Pressure Components

F) CNG Pressure Regulator

Main Features

- Two stages pistons pressure regulator
- High pressure shutoff valve withIP54 Electricalconnections
- Integrated filter(80µm)
- High efficiency heatexchanger, for propergas expansion
- Pressure reliefvalve accordingto R110

Low Pressure Components

F) CNG Pressure Regulator

Overall Dimension

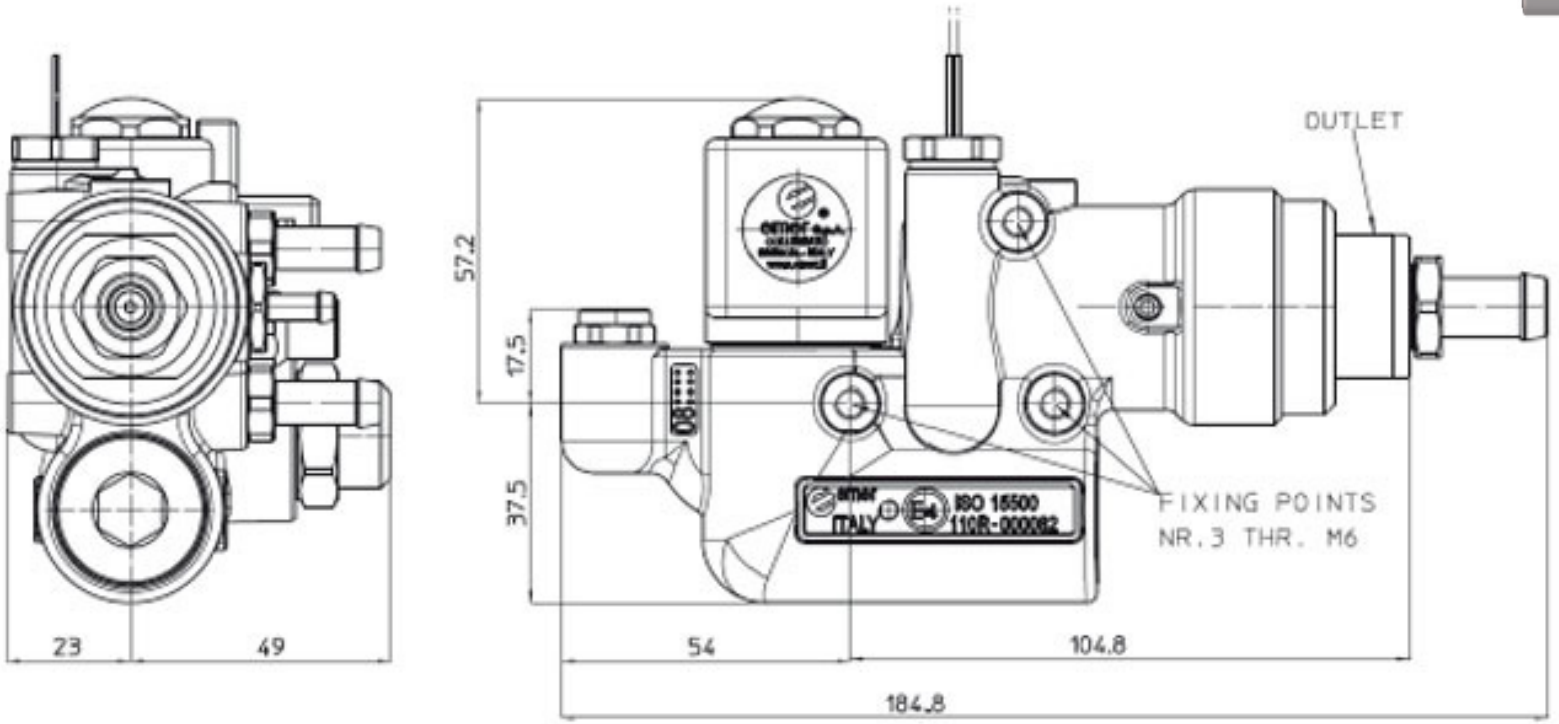

emer S.p.A.

Written by : Eng. Alessandro Schiavon
Approved by : Eng. Michele Crivellari
Date : 05/08/2009
Customer Ref : 34300-74/421

Low Pressure Components

F) CNG Pressure Regulator

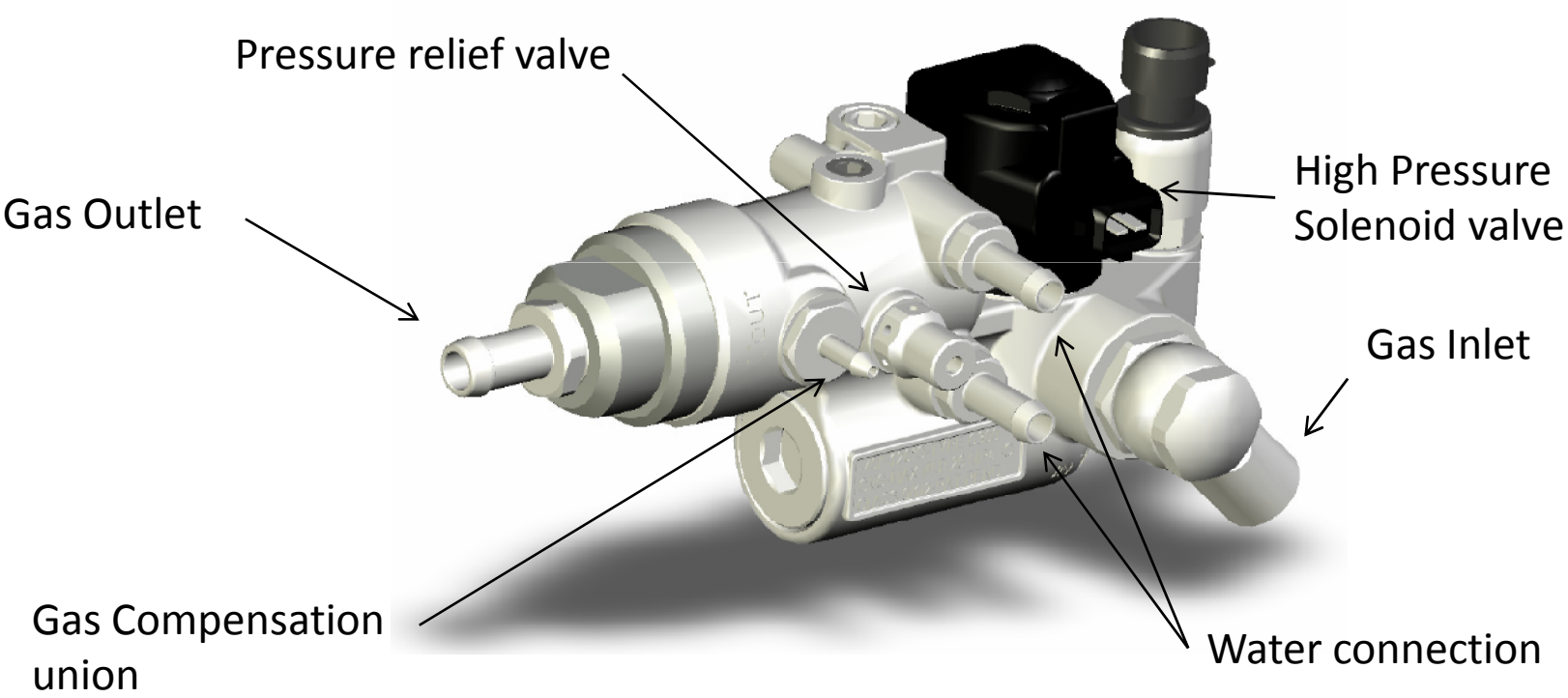

Written by : Eng. Alessandro Schiavon
Approved by : Eng. Michele Crivellari
Date : 05/08/2009
Customer Ref : 34300-74/421

Low Pressure Components

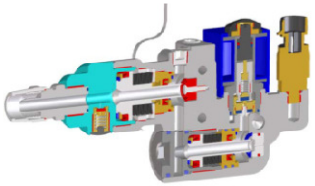

F) CNG Pressure Regulator (1)

Components	Specifications	Strong point
External Dimension	151,5 x 97 x 72	Compact
Weight	0, 9 Kg in Aluminium	Robust and light at the same time
Solenoid Coil	Absorbtion 1° (13W at 12V) IP54 electrical connection	Low absorbtion,low heating, water proof coil
In let Out let gas connection	Aisi 303 stainless steel	Easier for fittings installation
Piston Springs	Disk Spring (HP stage)	No vibration

Low Pressure Components

G) Injection Rail Emer code 34 .LPG.08 (1)

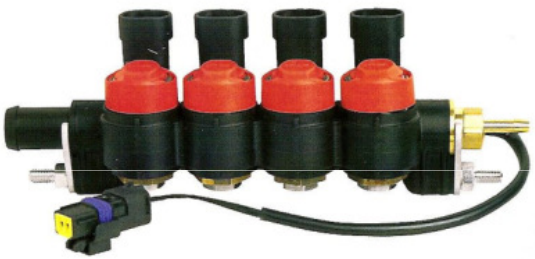

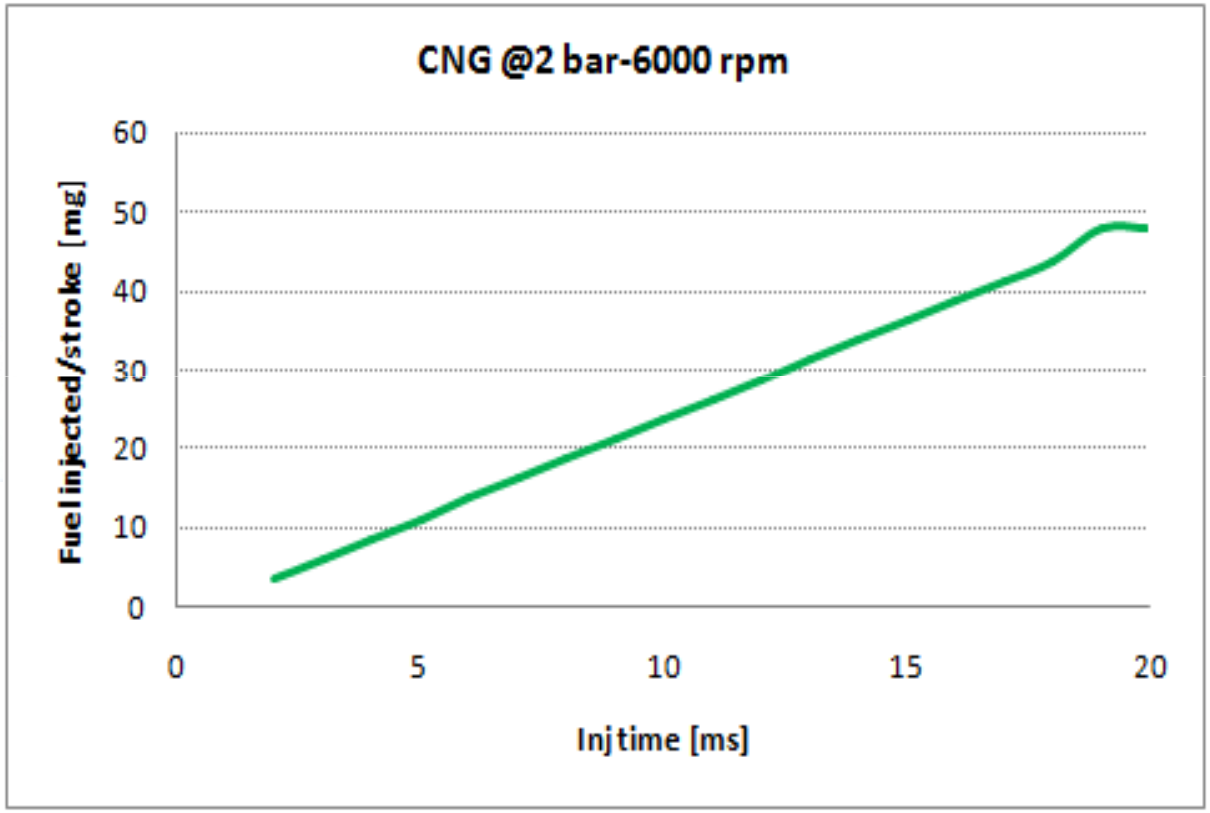

emer S.p.A.
Written by : Eng. Alessandro Schiavon
Approved by : Eng. Michele Crivellari
Date : 05/08/2009
Customer Ref : 34300-74/421

Low Pressure Components

G) Injection Rail

Fuel	LPG/CNG
Homologation	67R01 - 110R00 - ISO15500 (only brass body version)
Injector Type	Normally closed
Inlet	11-14-16 mm pipe
Outlet	4-6 mm pipe
Outlet nozzle size	Ø 1,5 to 2,8mm
Injector Layout	2,3,4 cylinders
Injector rail body	brass or polyarylamide glass reinforced
Temperature sensor	NTC type
Fuel feeding	side feed
Working temperature	-40°C÷120°C
Maximum service pressure	4,5 bar
Maximum working pressure	6,2 bar@13,5V
Static flow	2,6 g/s@1bar LPG
	3,25 g/s @1,5bar LPG
	2,4 g/s @2bar CNG
Opening time	1,7÷1,8 ms @1bar-13,5V
	2,0÷2,1 ms @2bar-13,5V
Closing time	0,9÷1,0 ms @1bar-13,5V
	0,9÷1,0 ms @2bar-13,5V
Linearity	±3%
Repeteability	±3%
Electrical connection	AMP DELPHI superseal
Coil resistance	2,5±0,1Ω @20°C
Working Voltage	6÷16V
Current control	Peak and hold
Durability test	150milion cycles
Dimensions (single injector)	60X40X25 mm
Weight (single injector)	81 g

* Injector Cap in black color for OEM Version

Written by : Eng. Alessandro Schiavon
Approved by : Eng. Michele Crivellari
Date : 05/08/2009
Customer Ref : 34300-74/421

Low Pressure Components

G) Injection Rail

Noise Level

A

B

D

C

- Acoustic pressure SIDE A: 75,0 Dba
- Acoustic pressure SIDE B: 75,5 Dba
- Acoustic pressure SIDE C: 79,5 Dba
- Acoustic pressure SIDE D: 74,1 Dba

Low Pressure Components

H) Low Pressure Filter

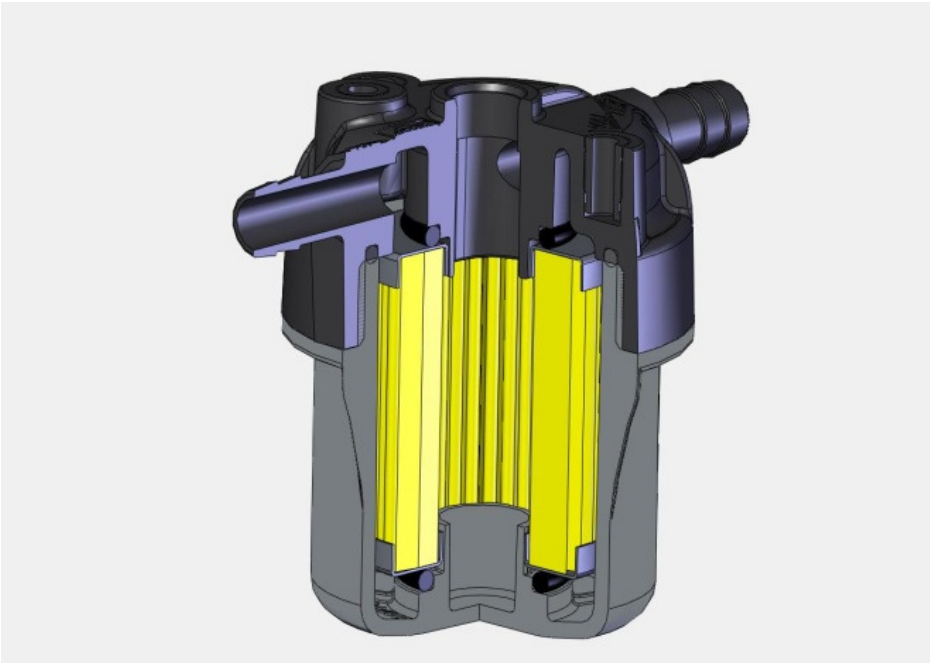

Written by : Eng. Alessandro Schiavon
Approved by : Eng. Michele Crivellari
Date : 05/08/2009
Customer Ref : 34300-74/421

Low Pressure Components

H) Low Pressure Filter Emer code 97.PPM.01 (1)

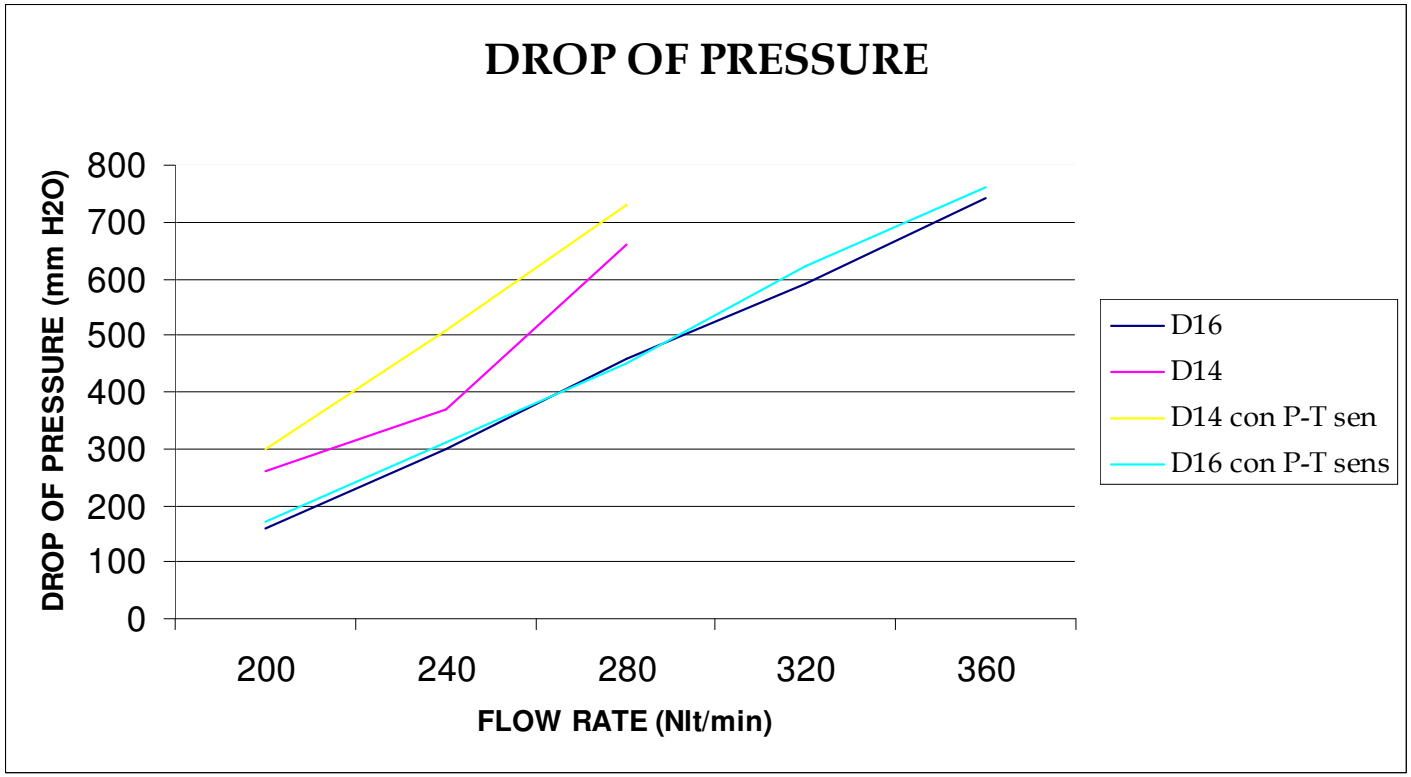

emer S.p.A.

Written by : Eng. Alessandro Schiavon
Approved by : Eng. Michele Crivellari
Date : 05/08/2009
Customer Ref : 34300-74/421

Low Pressure Components

H) Low Pressure Filter

<u>Mechanical specifications</u>

- Body filter material: PA 66
- Overall dimensions with sensor: 110x110 mm
- Weight of the filter with sensor: 0.2 Kg
- Burst pressure : > 10 bar

<u>Working conditions</u>

- Max working temperaure : +120°
- Min working temperature: -40°
- Working fluid : LPG and CNG
- Max working pressure: 4.5 bar

<u>Versions and accessories</u>

- IN/OUT rubber hose connection: Ø11, Ø14 e Ø16 mm
- Pressure and temperature sensor
- Fixing Brackets

Low Pressure Components

H) Low Pressure Filter

Specifications filtering element

- Nominal filtering capacity : 1÷2 micron
- MFPS: 4 micron
- Weight (g/m2): 75
- Efficiency @ 0.3 µ 5.32 cm/s : %99.9 con particolato ≥ 3 µ
- Drop of pressure: @ 0.3 µ 5.32 m/s: 32.5mmH2O,319 Pa
- Permeability FRAZIER: min. 4 cfm
- Burst Resistence : 1 KPa*m2/g
- Water repellancy : 400 mm
- Oil repellancy : min. 25 Dynes/cm

Approvals

- ECE/ONU R67-01
- ECE/ONU 110

Fixing Accessories

I) Fixing accessories

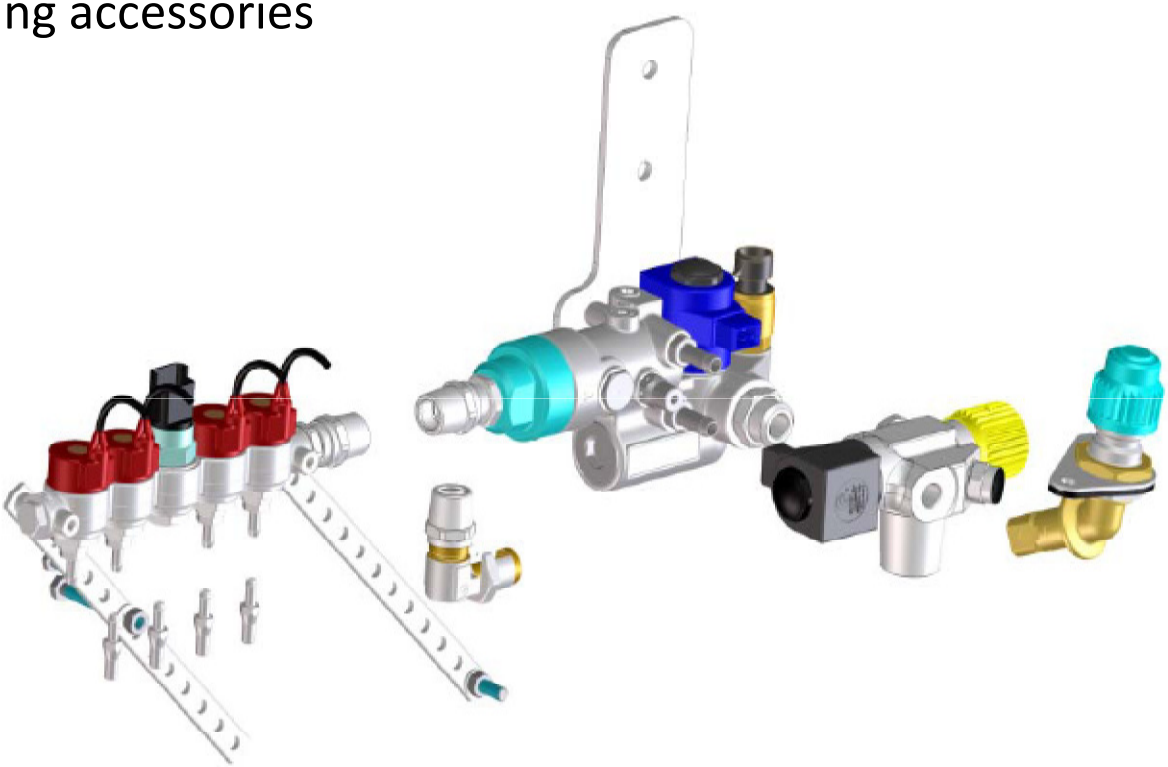

Written by : Eng. Alessandro Schiavon
Approved by : Eng. Michele Crivellari
Date : 05/08/2009
Customer Ref : 34300-74/421

Electronic Control Unit

EMER gaseous CNG injection system is driven by a bi-fuel, multipoint sequential injection Electronic Control Unit, that phases the gas injections in sync with petrol injection pulses (generated by OEM gasoline ECU).

Electronic Control Unit

The main feature of the gas ECU is to measure injection pulses generated by the OEM gasoline ECU, time-base and pulse durations. These pulses are then translated by the internal Speed-Density algorithm into injection pulses for the gas injectors.

A secondary algorithm interfaces with the OEM gasoline ECU ad fetches more information from its eOBD protocol, including fuel trims, close-loop control status and lambda oxygen sensors readings. **The basic gas injection pulses are corrected with this OBD information, along with other correction factors, computed** from sensors readings (for example for engine coolant temperature).

Electronic Control Unit

OBDII SEQUENTIAL INJECTION

Emer ECU control units with LPG/Natural Gas sequential injection and OBDII integration are one step ahead of the current control units installed on modern vehicles with indirect sequential injection. These evolved control units allow information to be received from the original petrol control unit via the OBDII diagnostics outlet. Thanks to this connection, when running on gas, the EMER control unit is able to monitor vehicle carburetion parameters constantly (thanks to the petrol control unit correctors), thus keeping the parameters at optimum values.
This integration means:

- better engine performance;
- guaranteed top performance even when the mechanical components of the gas fuel system age;
- automatic adaptation to the different gas qualities available on the market;
- more information available to the installer regarding vehicle function which makes tuning the system easier.

Electronic Control Unit

Technicals Specifications

Operating temperature range: -45÷120°C
Operating battery voltage range: 9÷16 VDC

Current drain:

•Fully working: 200mA
•Ignition off: 27mA
•Low power mode: 21mA

Single box to 4/6/8 cylinders Ecu

- Micro-controller: 16 bit, 48MHz clock, 256Kb memory
- Inputs:
•Gasoline injection pulses: 0-12Vpp
•Engine speed sensor: 0-12Vpp or 0-5Vpp
•Gas absolute pressure, MAP
•Gas and Water temperature sensors: 4K7, 10K NTC
•Tank level gauge sensor: 0-5V
•Optional lambda oxygen sensors (pre and post-cat): 0-1V or 0-5V

Electronic Control Unit

Technicals Specifications

Outputs

- Emulation front / rear lambda Sensor
- Power for Level Sensor
- Shut-off solenoid valves (1 outputs): 12VDC + (1 optional output)
- Gas injectors: 12Vpp, 500KHz Max PWM driver

OBD

- Compatible with all standard Iso KL
- Compatible with all standard CAN

Case

- Die-cast aluminium body, IP54
- Overall dimensions: 150x130x35 mm
- Weight: 0,510Kg

emer S.p.A.

Written by : Eng. Alessandro Schiavon
Approved by : Eng. Michele Crivellari
Date : 05/08/2009
Customer Ref : 34300-74/421

Actual Emer Partners

emer S.p.A.

Written by : Eng. Alessandro Schiavon
Approved by : Eng. Michele Crivellari
Date : 05/08/2009
Customer Ref : 34300-74/421